MODEL HP-6000-RV-TF

UNIVERSAL VALVE TESTER

The **Model HP-6000-RV-TF** s designed to test Safety Relief Valves and Shut Off Valves with air and water up to 4500 PSI. The tester is equipped with a 100-ton clamping fixture capable of clamping 2” to 12” flanged valves, and 1/2” to 2” NPT valves and a tilting fixture to test 2” to 12” flanged valves.

Standard features include:

- 100-ton clamping fixture with four arms
- 5000 PSI air compressor built in with two 10-gallon DOT tanks rated at 4500 PSI
- 10-gallon air surge tank, ASME 5000 PSI
- 10-gallon water surge tank, ASME 5000 PSI
- 1 1/2” 6000 PSI ball valve with actuator
- Control console cabinet, powder coated
- 6” dial gauges 0.5% accuracy full scale with red hand maximum pressure pointer.
- Digital Gauge for Data Acquisition with RS-232 output signal
- Data Acquisition System with PC, flat screen, keyboard, mouse and printer
- Data Acquisition Software and cables

745 Main Street, Chula Vista, CA 91911 619.585.8484 800.258.7848 Fax. 619.585.9996
E Mail: info@barbeetesters.com Web Site: www.barbeetesters.com

MODEL HP-6000-RV-TF
UNIVERSAL VALVE TESTER

Date: 3/29/2010 10:05:12 AM
Work Order: BVS1970

Test Sheet: RUN OFF TEST
Serial #: 1234
Technician: RG

Valve: SRV
Valve Mfr: HYDRASEAL
Valve Size: 2 X 3

Notes:

Popping Pressure: 973.00 psi
Reseating Pressure: 493.00 psi
Target Pressure: 750

Ave. Slope: 1.65 psi/sec

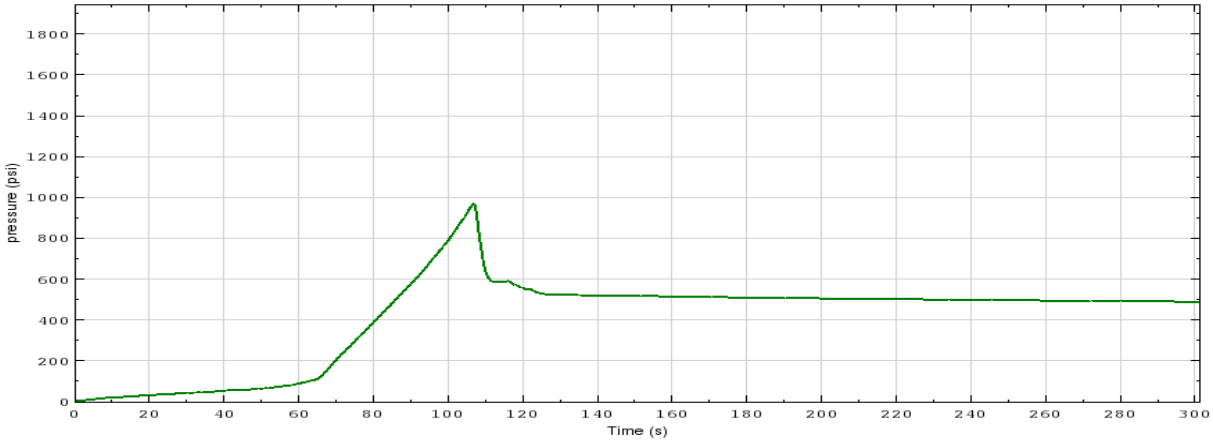

barbee ENGINEERED TESTING SYSTEMS

http://www.barbeetesters.com

Data Acquisition
The set (popping) pressure, re-seat pressure, valve model and serial number, size can be displayed along with other data such as technician name, and date. Data is displayed on the flat screen monitor of the computer, and can be saved in the system as well as printed with the ink jet printer installed.

High Pressure Air Compressor
- 220/440 Volts AC 50/60 Hz 3 Phase
- 5000 PSI Maximum Pressure
- 9.0 CFM Flow Rate
- Automatic Drain Valves with Timer
- Motor Starter & Controller
- Available with explosion proof motor
- Repair Kits & Extra oil optional

Optional Accessories
- Muffler Assembly (MF-SERIES)
- Spare Parts Kit
- Sea Worthy Shipping Container
- On-site training at customer's facility
- Free In-House training at @ Barbee's facility in San Diego, California

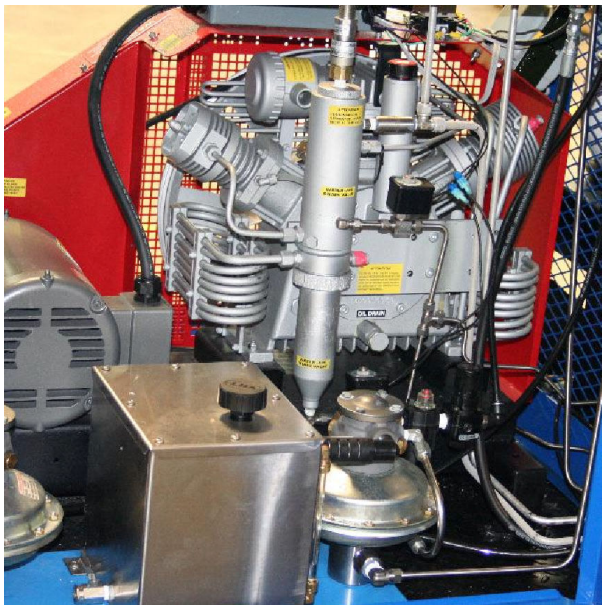

745 Main Street, Chula Vista, CA 91911 619.585.8484 Fax. 619.585.9996
E Mail: info@barbeetesters.com Web Site: www.barbeetesters.com

RELIEF VALVE CLAMPING FIXTURE SHOWN ABOVE WITH A 4-ARM SET UP. AVAILABLE WITH 3 ARM CLAMPING DESIGN. TILT FIXTURE SHOWN ON RIGHT SIDE. STAINLESS STEEL SEAL PLATES WITH O-RING GROOVES TO SEAL 2" TO 12" VALVES

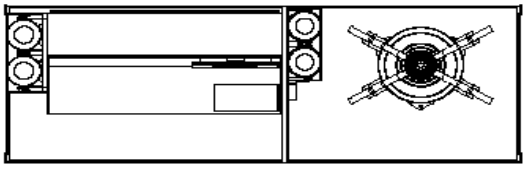

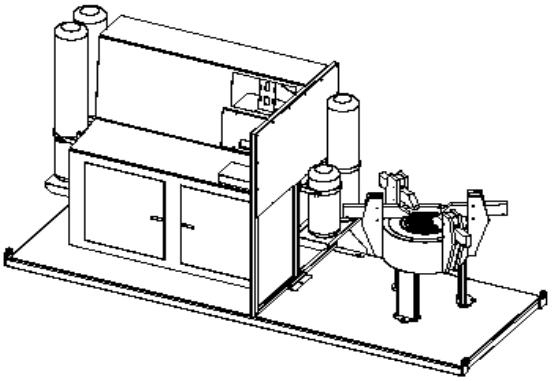

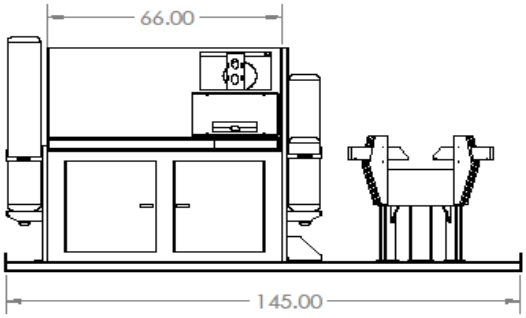

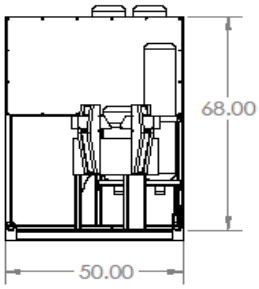

745 Main Street, Chula Vista, CA 91911 619.585.8484 Fax. 619.585.9996
E Mail: info@barbeetesters.com Web Site: www.barbeetesters.com

MODEL HP-6000-RV-TF
UNIVERSAL VALVE TESTER

MODEL HP-6000-RV-TF SPECIFICATIONS

TEST COMPONENTS:
Flanged and threaded relief valves and shut off valves from 1/2" to 2" NPT, 2" to 12" flanged.
TEST PRESSURE:
0-4500 PSI air & water, 6000 PSI HYDRO
CLAMPING FIXTURES: RV fixture: 100 tons, tilt fixture: 100 tons, 30 inch stroke cylinder 36" maximum open face to face.

AIR TANKS: 10 gal. ASME water air surge tanks 5000 PSI, 10 gallon DOT 4500 PSI air storage tanks (2each)
DATA ACQUISITION:
PC, flat screen, keyboard, mouse, printer, software and hardware included. Digital gauge, panel mounted with RS-232 port.

HYDROSTATIC SYSTEM
HYDRO PUMP: Air-operated 0-6000 PSI for seat testing, adjustable pressures.
GAUGES: 6" dial panel-mounted gauges, 0.5% accuracy full scale, max pressure pointer, and gauge savers.
COMPONENTS: All high-pressure valves, fittings and tubing stainless steel. All gauges, valves and controls panel-mounted for ergonomic controls.
SAFETY FEATURES:
A hydraulic safety interlock valve is installed in the circuit to prevent accidental release of clamping pressure unless the test pressure is vented. Safety Lexan ® shield Included to protect operator during tests.

VALVE TEST CAPABILITY

VALVE SIZES ANSI CLASS	VALVE SIZE	MAXIMUM TEST (BAR)	MAXIMUM TEST (PSI)
1/2" -4"	15-100 MM	400 BAR	6000 PSI
5"-6"	125-150 MM	300 BAR	4350 PSI
8"-10"	200-250 MM	150 BAR	2175 PSI
12"	300 MM	80 BAR	1160 PSI

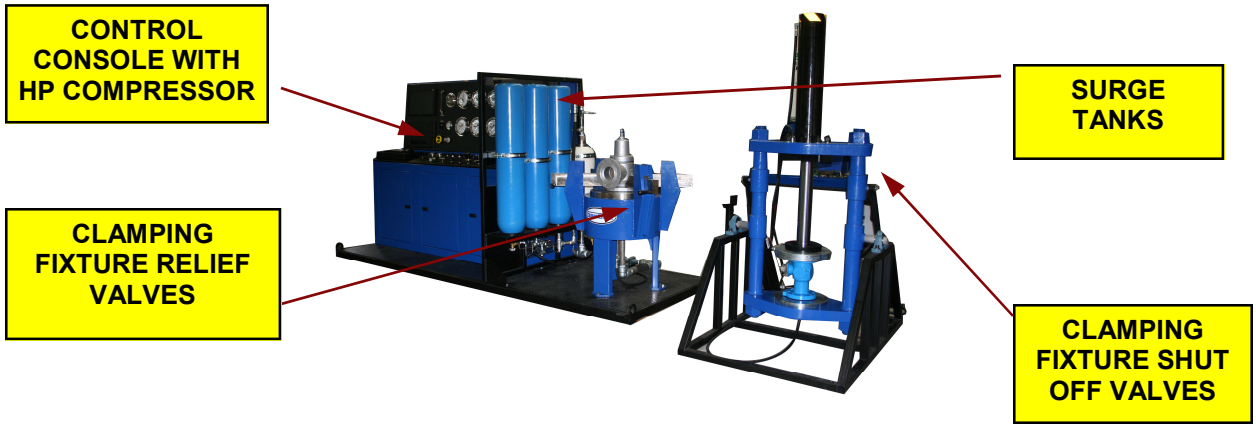

DIMENSIONS:145" L X 50" W X 68" H , APPROXIMATE WEIGHT: 5500 LBS. WITH HEAVY-DUTY EPOXY COATED PLATFORM WITH LIFTING EYE LUGS. TILT FIXTURE: 48" W X 60" L X 92" H 3500 #

745 Main Street, Chula Vista, CA 91911 619.585.8484 Fax. 619.585.9996
E Mail: info@barbeetesters.com Web Site: www.barbeetesters.com